Raychem

HTLP* 80

Installation Instructions

AG-HTLP80-S1301M-REV3-1204

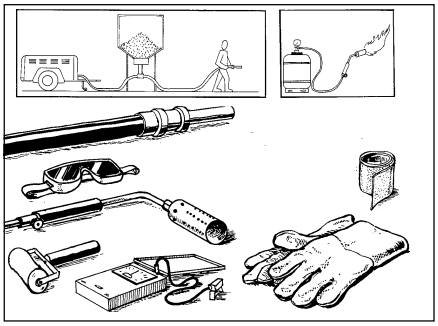

Materials and equipment

1. Appropriate size HTLP80 sleeve and WPCP-IV closure, Raychem S1301M epoxy primer either in small or bulk kits, with the appropriate epoxy pump, with mixing sticks, cups, Tyco Adhesives approved applicator pads and protective gloves.
2. Tyco Adhesives recommended torch type or equivalent.

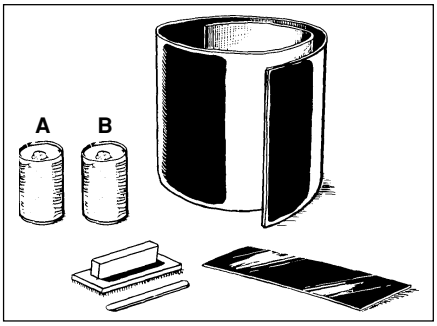

3. Propane tank with Tyco Adhesives recommended regulator, hose and gauge.
4. Contact pyrometer (or Raychem temperature strips).
5. Raychem calibrated epoxy pumps (if applicable).
6. Siliconized hand roller (straight).
7. Standard safety equipment such as gloves, goggles, hard hat, etc.
8. For larger jobs epoxy primer can be supplied in bulk kits.

Notes:
Installation must be done according to local regulations and usual safety precautions.

This installation instruction is intended for the Raychem HTLP80 system to be installed on pipes coated with fusion bonded epoxy (FBE), coal tar enamel (CTE), 2 or 3 layer PE.

For the selection of Raychem's joint protection materials for other pipe coatings, see Raychem product selection guide or contact the nearest Tyco Adhesives Sales Office.

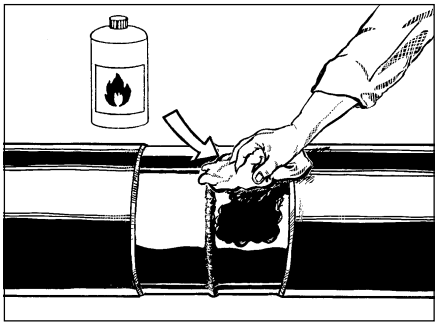

1. Clean exposed steel and adjacent pipe coating to be covered by HTLP80 sleeve. Remove all contaminants such as oil. Use a solvent that contains no grease or oil type materials.

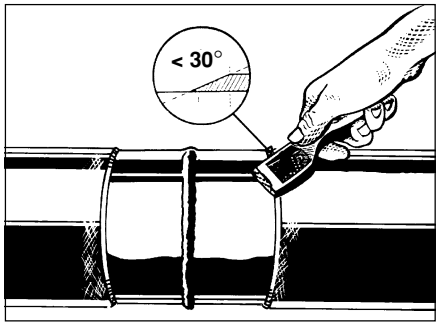

2. If not factory beveled, chamfer the adjacent pipe coating to an angle of preferably 15°, maximum 30°. Inspect the edge of the existing pipe coating. Disbonded sections have to be trimmed of and the coating edge has to be beveled again. To avoid possible contamination, it is recommended to use a scraper.

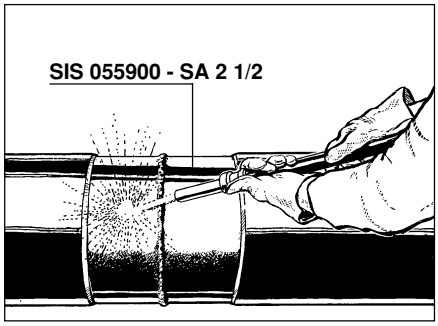

3. Grid blast or sand blast the steel surface to remove loose and foreign materials. The surface should be cleaned to SIS 055900 - SA 21/2.

.

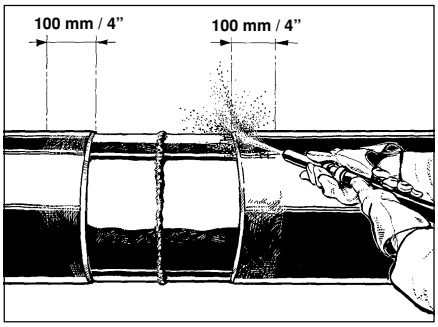

4. Grid or sand blast the adjacent pipe coating over a distance of at least 100 mm (4"). The total width should be approximately 50 mm (2") larger than the width of the Raychem supplied HTLP80 sleeve.
Note: prior to blasting, it is recommended to preheat the exposed steel to 40 - 50° C (104 - 122°F) to avoid flash rust formation.

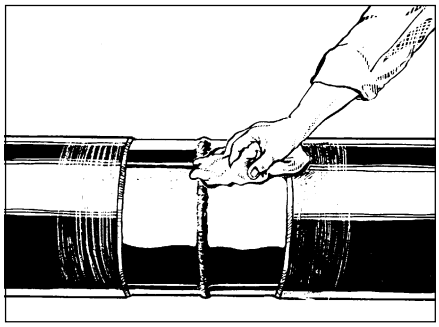

5. Wipe the surface to remove dust and remaining blasting material. Use a clean dry cloth or air blow.

HTLP* 80

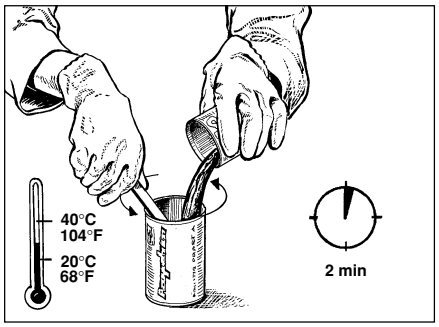

6. Dose the two component Raychem epoxy. Use pre-dosed Raychem epoxy kits or use Raychem calibrated epoxy pumps.
For pre-dosed Raychem epoxy kits, pour content of can B into can A and mix for approximately 1 minute. Using small epoxy primer kits. Open cans A and B, poor all contents of can B into can A. Stir thoroughly the mixed epoxy for 1 minute. After use follow local regulations for safe disposal.
Mixed epoxy primer has a pot life of approximately 60 minutes at ambient temperature. As long as the epoxy primer is still liquid, it may be used.
Mixed epoxy primer has a pot life of approximately 60 minutes at ambient temperature. As long as the epoxy primer is still liquid, it may be used.
For easy mixing and dispensing, the epoxy primer should be used at a temperature of min. 18° C (64°F). When necessary, keep the epoxy primer at a heated place or use a Raychem epoxy heater.
Using bulk epoxy primer kits.
Bulk epoxy primer should be used at a minimum of 18°C (64°F), if not keep it in a heated place or use the epoxy primer heater.
Attach the precalibrated epoxy pump A to drum A, and pump B to drum B.
Pump B has a pre-installed spacing ring. The correct mix ratio is obtained with one full stroke of A and one full stroke of B. This will dispense a mixture that has three parts of A and one part of B by volume.
Refer to epoxy installation instructions, additional information is available upon request. After use follow local regulations for safe disposal.
IMPORTANT: Always use one stroke of A and one stroke of B to get the correct mix ratio of three parts A and one part B by volume.

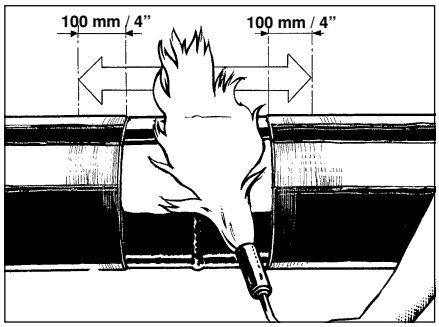

7. Adjust the torch to a yellow topped blue flame of approximately 500 mm (20") long. Preheat the steel and the adjacent pipe coating to 60° C (140°F) minimum, 90° C (194°F) maximum. Preheating of the surface reduces the installation time and ensures proper bonding.
Make sure that all necessary items including mixed epoxy primer are in close proximity before starting preheating.
In bad weather conditions, use proper shielding such as a wind shield in windy conditions or a well ventilated tent in the case of rain.

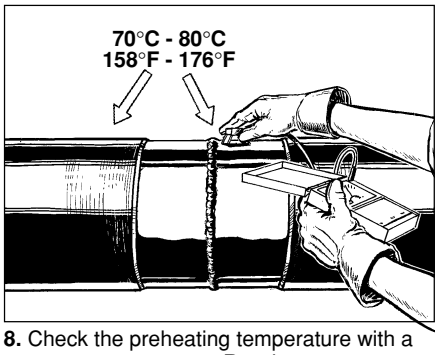

8. Check the preheating temperature with a contact pyrometer or a Raychem recommended temperature indicator strip. Certain temperature markers can cause contamination and therefore their use should be avoided.

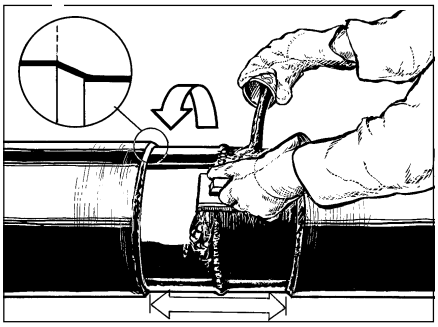

9. Immediately after preheating, apply the mixed epoxy primer to the bare steel using a Tyco Adhesives approved application pad. Visually check the surface and ensure all bare steel is covered by the epoxy primer.

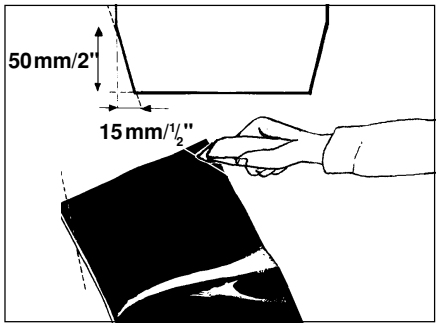

10. If not factory cut, cut the corners of the underlaying end of the sleeve to approximately 15 mm x 50 mm (1/2"x2").

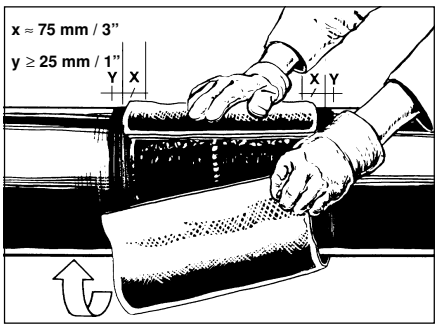

11. Immediately after the application of the epoxy primer, and while the epoxy primer is still wet, loosely wrap the HTLP80 sleeve centrally around the welded joint.
The edge of the sleeve with the trimmed corners should be on the pipe first. The sleeve should overlap in the 10 to 2 o'clock position and the overlap of the sleeve onto itself should be at least 50 mm (2").
The sleeve should be wrapped around the joint leaving a gap of minimum 25 mm (1") between the bottom of the pipe joint and the sleeve.

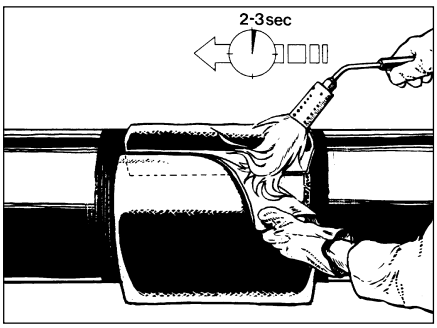

12. Gently heat the inside of the overlapping sleeve edge and press down onto the opposite sleeve and with a gloved hand.

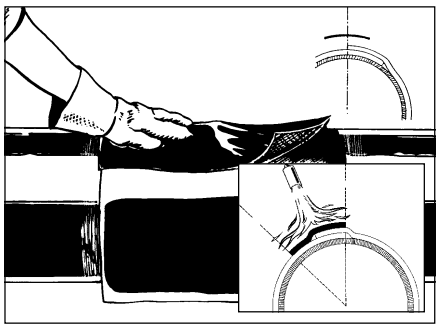

13. Heat the inside of the closure patch for 1 - 2 seconds. Position it evenly over the edge of the heat shrinkable sleeve. Press it down firmly.
In case of a factory supplied pre-attached closure patch, this step is not necessary.
Only heat the patch material and maximum one inch of the heat shrinkable sleeve on both sides of the patch.

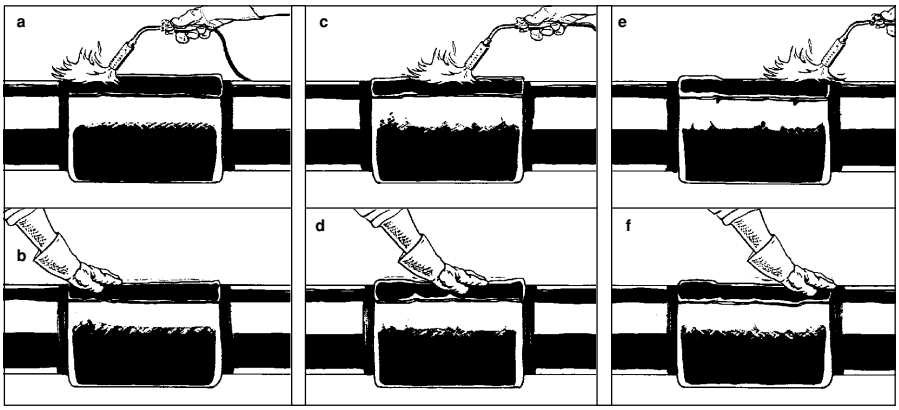

14. Start heating the closure patch from one side and slowly move to the other side while pressing down with a gloved hand to ensure good bonding and eliminate air entrapment. During and after the heating, the fabric reinforcement becomes visible as an indication that the closure patch has been heated to the minimum required temperature.

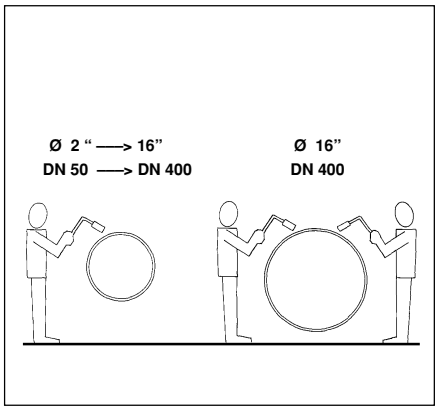

15. For sleeves for pipes of 400 mm (16") diameter and larger, two installers are recommended.

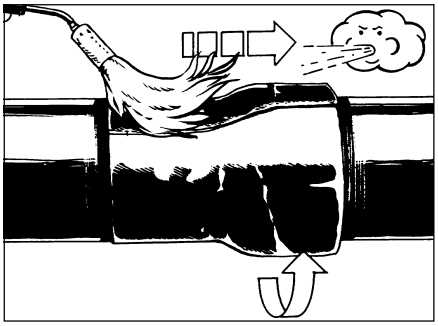

16. Begin heating at the center of the sleeve and heat circumferentially around the pipe using a constant paintbrush motion. Continue heating towards one end of the sleeve, followed by the other.
In case of strong wind, begin heating the sleeve from one end of the sleeve, opposite to the wind and heat circumferentially around the pipe, using a constant paintbrush motion. The flame should not be held perpendicular to the sleeve but should be directed towards the shrinking direction.

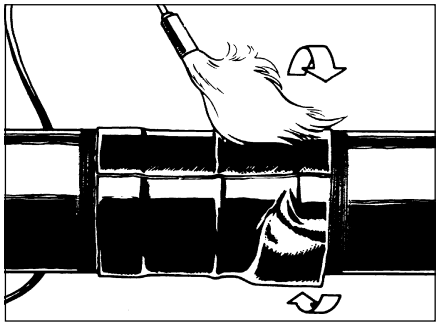

17. Continue heating towards the other end of the sleeve. Ensure that the total sleeve has been heated evenly and has completely shrunk tightly around the pipe.

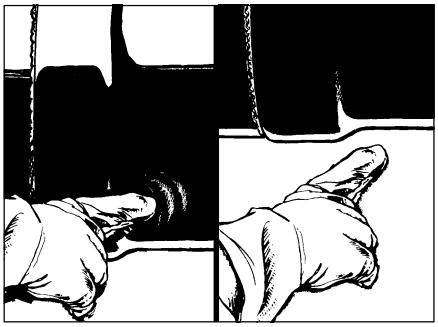

18. During shrinkdown, occasionally check adhesive flow with finger. Wrinkles should disappear automatically.

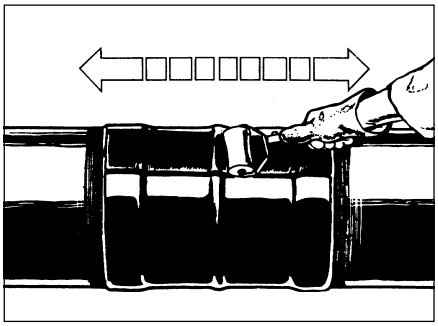

19. Possible air entrapments can be reduced to the maximum by post rolling of the sleeve. Immediately after the sleeve has been shrunk onto the joint area and while the sleeve is still hot and soft, roll the entire sleeve with a segmented roller. Start rolling from the weld bead towards the sides forcing possible air enclosures out of the sleeve. Special attention should be given to the longitudinal and circumferential weld bead, the transition of the mill coating and the patch area.
If necessary, areas may be reheated to roll out air.

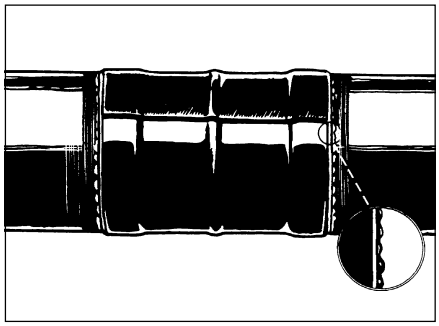

20. The sleeve is fully recovered when all of the following have occurred :
1) The sleeve has fully conformed to the pipe and adjacent coating.
2) There are no cold spots or dimples on the sleeve surface.
3) Weld bead profile can be seen through the sleeve.
4) After sleeve is cool, adhesive flow is evident on both edges.